ASSEMBLY INSTRUCTIONS FOR

Model #ADFS
ADIRONDACK FOOTSTOOL

Oxford Garden Designs
4175 Lyndon Way
Louisville, Kentucky 40207
502 / 719-2222
www.oxfordgarden.com

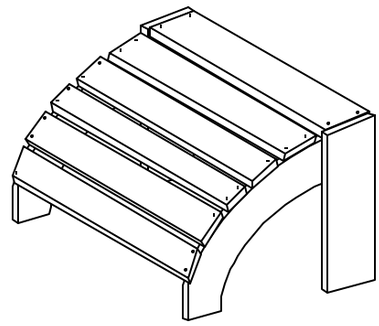

ADIRONDACK FOOTSTOOL

Model #CD48
4’ Classic English Bench

Model #CD60
5’ Classic English Bench

Model #CDCH
Classic English Armchair

Model #CDCH48
4’ Chadwick Bench

Model #CDCH60
5’ Chadwick Bench

Model #CDCHCH
Chadwick Armchair

Model #CDTA
36” Cocktail Table

Model #CD42TA
42” Square Dining Table

Model #CDET
18” Square End Table

Model #PL-19
19” Shorea Planter

Model #PL-15
15” Shorea Planter

Market Umbrellas in
- Natural Cotton Canvas
- Hunter Green Polyester

BOUT SHOREA

Shorea, is a tropical hardwood which grows naturally and plentifully in the Pacific Rim countries of Malaysia, Indonesia hilippines, and Burma. It is closely related to tectona grandis, or Burma teak, and is therefore used in many outdoor urniture applications.

Shorea is abundant and very accessible, and is therefore a considerably less expensive choice over teak for all outdoc pplications. Shorea is very dense and hard, making it resistant to wearing and marring.

Like teak, shorea has a 12 percent moisture content. It is these natural oils which allow shorea to withstand the effects f sun, rain, snow, and frost. The oils also make shorea wood virtually maintenance free. If left untreated, shorea will weathe aturally over time to a warm shade of gray.

Because of its durability in outdoor applications, its availability, and its affordability, Oxford Garden Designs is committe o the exclusive use of shorea. It allows us to provide our customers with premium, all wood, all weather furniture at an ffordable price.

ARE AND MAINTENANCE

Your Oxford furniture arrives in its natural state, without any oils or finishes. Upon completion of assembly, you may notic ome staining from you hands, or possibly some water stains from shipping. Shorea is extremely dense, and therefore ar taining will be only on the very surface of the wood, so any marks or abrasions can be easily removed by liberally sandir e wood with 100 grit, or medium sandpaper.

Shorea is strong enough and weather resistant enough to be left totally untreated. If left alone, your furniture will weathe o a warm and soothing shade of gray.

you prefer to prevent this natural weathering, or to enhance the lustre and color of the wood, you may apply a coat of eak oil. If you allow your furniture to weather, and later decide to restore it to its original condition, use a teak cleaner firs nd then you may apply the teak oil. These products are available at most hardware stores and boat dealers, and are vailable through many Oxford dealers. ***Avoid using any hard varnish or paint.***

OXFORD GARDEN DESIGNS ~ ADSF - ADIRONDACK FOOTSTOOL

The Oxford Designs Adirondack Footstool has 3 component parts - the legrest, and 2 legs.

To assemble:

1. Attach the legs to the legrest using 3 screws per leg.

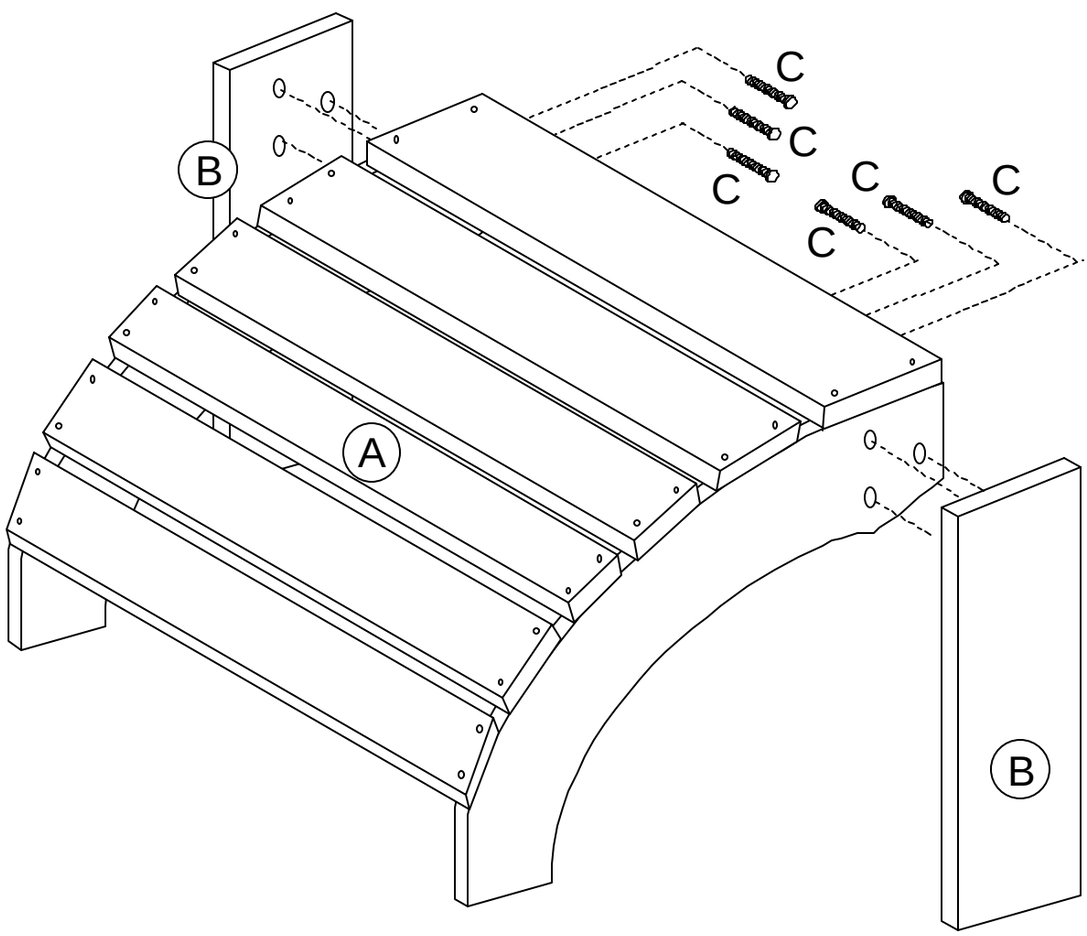

HARDWARE & PARTS

A (1) LEGREST

B (2) LEGS

C (6) BOLTS